Bulletin No. 115-26

Mid-West® Instrument

Model 115 – Differential Pressure Gauge
Bellows Type

High Accuracy, Tank Level Measurement
±1% Full Scale Accuracy



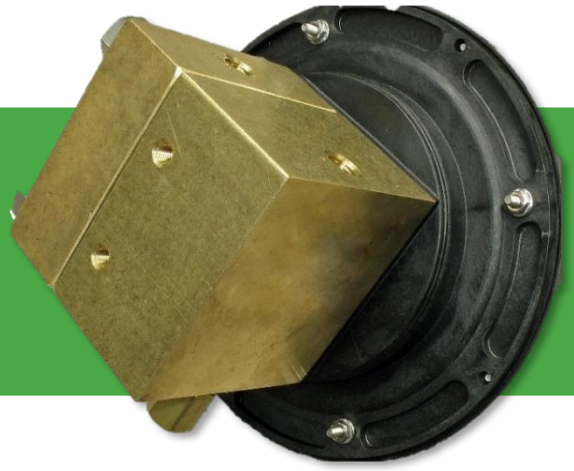

Product Overview – Model 115 Differential Pressure Guage

The Mid-West® Instrument Model 115 is a high-accuracy differential pressure gauge engineered for liquid level measurement in closed tank applications. Utilizing a rugged bellows sensing element and precision mechanical linkage, the Model 115 provides direct-reading differential pressure (ΔP) indication with ±1% full-scale accuracy.

Designed for use with cryogenic and pressurized gas systems, the Model 115 is suitable for helium, nitrogen, oxygen, carbon dioxide, hydrogen, and argon service. A built-in micro-adjust pointer allows convenient field re-zeroing, while a bi-directional Over-Pressure Relief Valve (OPV) protects the sensing element by equalizing pressure between the high and low sides whenever differential pressure exceeds 130% of the instrument's rated range.

Common Applications

- **Cryogenic tank level measurement** — Differential pressure sensing for closed cryogenic and gas tanks
- **Over-the-road trailers** — Lightweight, corrosion-resistant design for mobile tanker service
- **Stationary storage vessels** — Reliable level monitoring for LNG and other liquid gas containment systems

Installation Tip:

A **3 or 5 valve manifold** is recommended for installation of the Model 115. Proper use helps prevent over-range conditions and pressure shock during system pressurization, and allows for convenient zeroing, range adjustment, and calibration verification.

Mid-West® Instrument

Model 115 – Differential Pressure Gauge
Bellows Type

Key Features & Benefits

- **Bellows Sensing Element –** Direct-acting mechanism for low-pressure differential accuracy.
- **Wide Range Coverage –** From 0–10" H_2O to 69.9" H_2O.
- **High Overpressure Protection** – Integrated bi-directional relief valve activates at 130% of rated range.
- **Corrosion Resistance** – Engineered plastic front and stainless hardware to withstand harsh outdoor and mobile trailer environments.
- **Lightweight Design –** Up to 30 lbs. lighter than competing low-range DP gauges.
- **Flexible Mounting Options –** Standard rear mounting holes plus panel, wall, pipe, and ¾" NPT stainless steel stub mount configurations simplify installation across a wide range of tank and process applications.
- **Custom Dials –** Available in single, dual, or tri-scale formats.
- **Reliable Performance** – Backed by a 1-Year Warranty.

Technical Specifications

Specification	Details
Accuracy	±1% of Full Scale **(ASME B40.1 Grade 1A)**
Differential Pressure Range	0–10" H_2O to 0–69.9" H_2O (25 mbar to 2.5 PSID)
Working Pressure Ratings	500 PSIG
Housing Material	Brass
Wetted Internals	316 Stainless Steel
Dial Sizes	4½" and 6" Black with White Lettering
Dial Arc	270°
Seal Material	Viton® **(Standard)**; Buna-N and EPDM available
Port Configuration	¼" FNPT Dual Top & Bottom Ports
Mounting	Panel mounting and (2) 5/16-24 threaded holes standard
Operating Temperature	–40°F to 200°F
Dial Enclosure Rating	Designed and tested to meet NEMA Type 4X requirements.
Proof Pressure	2x Working Pressure @ Ambient Temp

Mid-West® Instrument

Model 115 – Differential Pressure Gauge
Bellows Type

Dial Range Options

- Standard scales are shown below. Others may be available.
- Custom dial scales (dual-scale, color bands, etc.) may be available.
- Contact customer service to learn more.



Standard Dial Ranges – Model 115

Inches H_2O
0-10 "H_2O
0-20 "H_2O
0-30 "H_2O
0-40 "H_2O
0-50 "H_2O
0-60 "H_2O
0-69.9 "H_2O

mm H_2O
0-1,000 mm H_2O

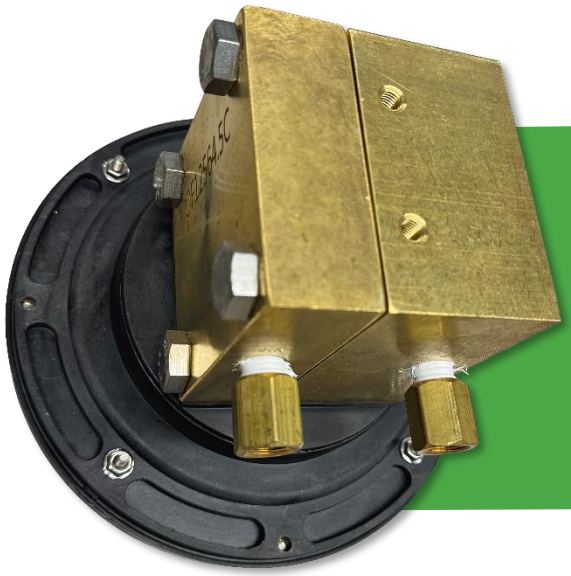

Model	Accuracy	Min. ΔP Range	Max. ΔP Range
115	± 1 % (descending)	0-10" H_20	0-69.9" H_2O

Mid-West® Instrument

Model 115 – Differential Pressure Gauge
Bellows Type

Standards

Model 115 gauge either conforms to and/or is designed to the following required standards:

- **ASME B40.100**
- **ASME B1.20.1**
- **SAE J514**
- **UL Std. No. 50**

Dimensions

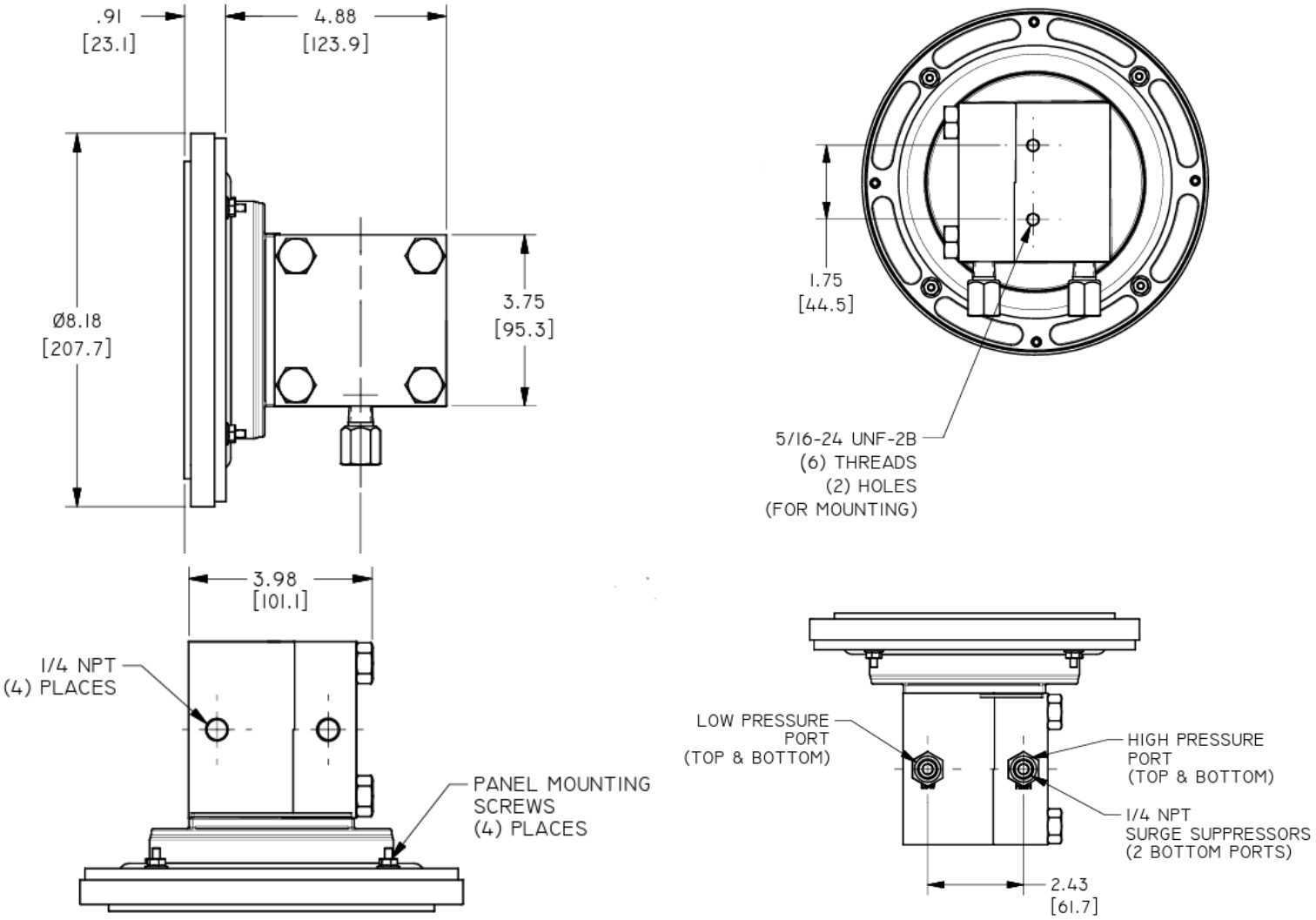

Mid-West® Instrument

Model 115 – Differential Pressure Gauge
Bellows Type

Standard Model Number Sequence: 115BB-10-O-O

500 PSIG Working Pressure, Brass Body, Stainless Steel Wetted Internals, Viton Seals, ¼" FNPT Dual Top & Bottom Connections, 6" Uni-Directional Round Dial,
Weather Resistant Engineered Plastic Case with Shatter Resistant Acrylic Lens,
Accuracy ±1% Full Scale (Ascending)

Range: 0–10" H_2O to 0–69.9" H_2O

Gauge body and internal components are considered wetted parts.

Model Number Configuration

1	1	5			-			-					-	O
[Model]			2	3	-	4	5	-	6	6	6	6	-	7

* Each character position relates to the numbered section in table below.

Range: _____ **Scale:** _____

2 Material

B	500 PSIG, Brass body, stainless steel bellows, stainless steel internals
Z	Special (uncoded options)

3 Dial Size Type

B	6" Round Uni-directional dial, black with white letters
W	6" Round uni-directional dial, white with black letters
Z	Special ***(Un-coded Options)***

4 Seal Materials

0	Buna N (aka NBR or Nitrile)
1	Viton® (FKM) Viton® is a Registered trademark of DuPont Dow Elastomers
5	Ethylene Propylene (EPDM)
9	Special ***(Un-coded Options)***

5 Process Connections

0	1/4" FNPT dual top and bottom connections (Hi port on the right side when facing the dial)
1	1/4" FNPT dual top and bottom connections (Hi port on the left side when facing the dial)

6 Additional Options

O	None
A	Brass snubber fittings mounted in bottom process connections
B	Brass snubber fittings mounted in top process connections
D	3/4" NPT Stainless Steel stub mount bracket
F	Pipe mounting kit (carbon steel)
P	Panel mount gauge front
Q	CRN (Canadian Registration Number)
S	Shatterproof glass lens
T	Cleaned for Oxygen Service.
U	Stainless steel tag mounted with stainless steel wire
Y	4-1/2" Round dial case (not available with any electrical options)
Z	Special ***(Un-coded Options)***

7 Electrical Configurations

O	NONE

Not all options are available in combination with other options.